University of Michigan - University of Notre Dame
TwinSol Radioactive Nuclear Beam Project

ASA6 Shim Spacer Plate
Between Valve & Cryopump

Requested by: F. Becchetti
Drawing: M. Lee 11/19/96
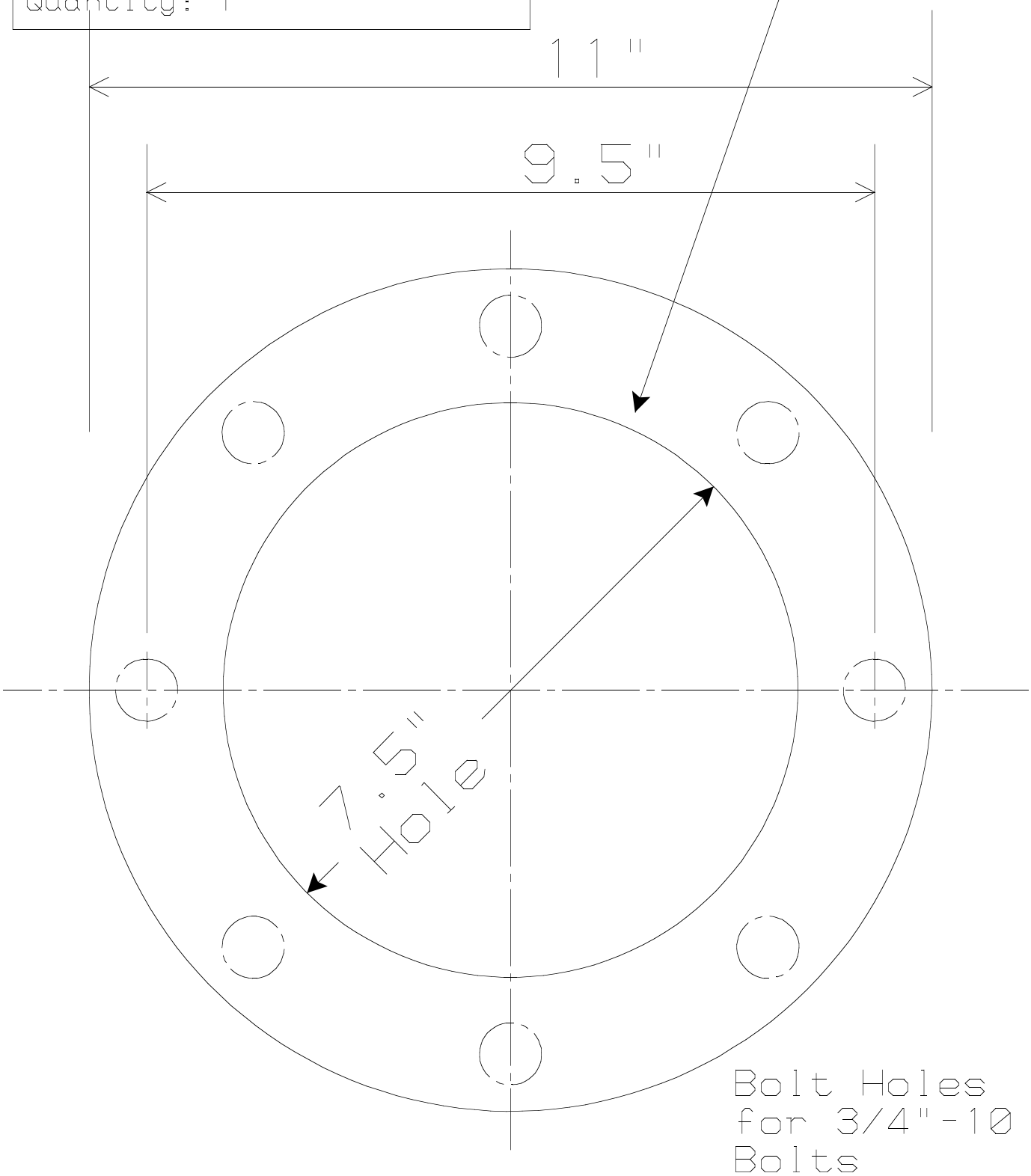
Mat'l: 1/4" Aluminum
Quantity: 1