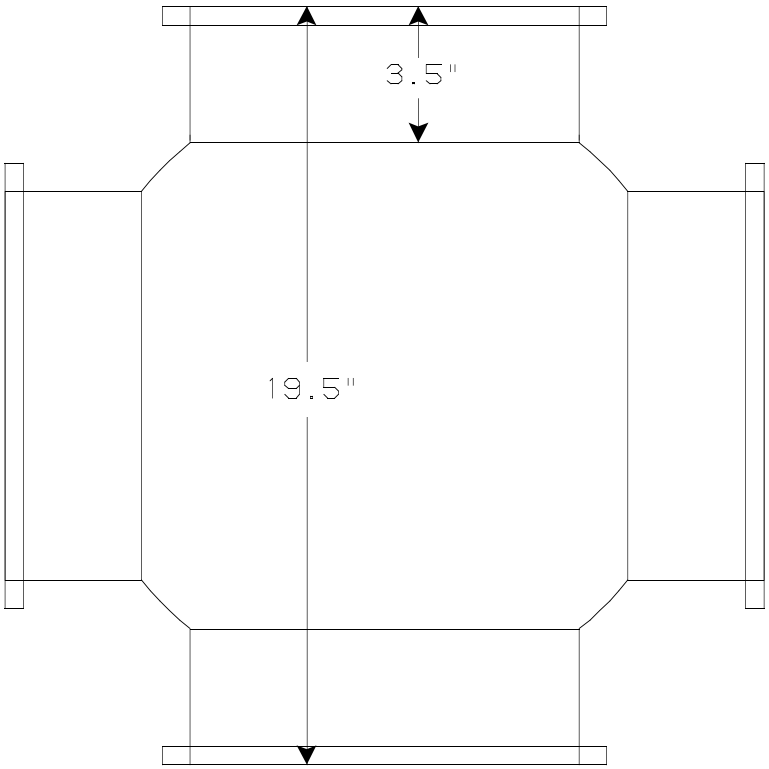
3.5"
19.5"

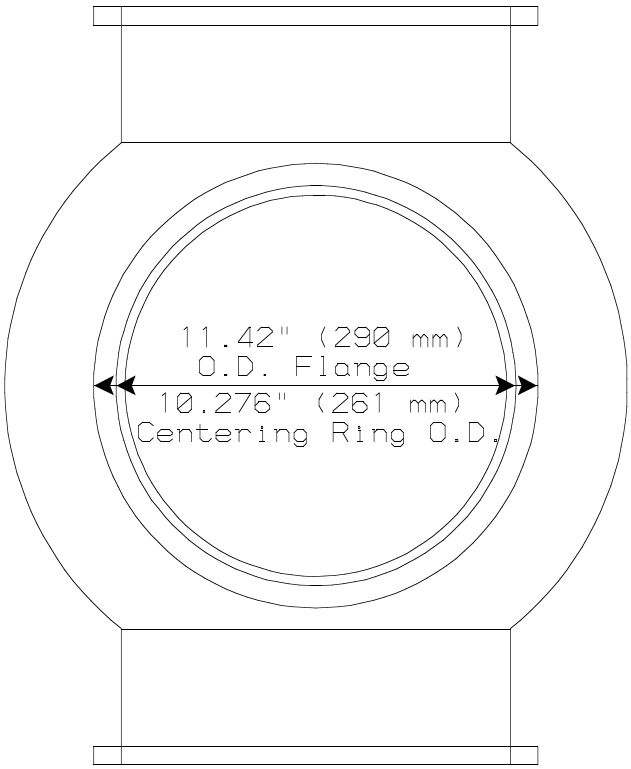
11.42" (290 mm)
O.D. Flange
10.276" (261 mm)
Centering Ring O.D.